Bicycle Barn - Eco 3

Components:

Main parts
2 x steel end feet
2 x steel middle feet
4 x short back oak legs
2 x long front oak legs
4 x recycled plastic curved ribs
2 x recycled plastic roof sheets
2 x oak roof struts
1 x oak back strut
1 x long steel security bar
2 x long steel roof bars
4 x short steel security bars
2 x recycled plastic ends
3 x ground hoops

Fixings
12 x long steel coach bolts for feet
12 x steel dome nuts for feet
8 x short steel coach bolts for ribs
40 x steel washers for ribs & feet
8 x steel nuts for ribs (if needed)
8 x steel dome nuts for ribs
30 x anti tamper security steel screws for lower steel bars & oak back bar
8 medium screws for long steel roof bars
8 short screws for 'U' supports
2 x 'U' supports for long steel roof bars
4 screws for plastic ends
1 x roofing tape
10 x self tapping floor bolts
3 x sets of ground hoop bolts

Note: The main components are labelled and should be attached to the Bicycle Barn as described because the pilot holes have been pre-drilled to suit.

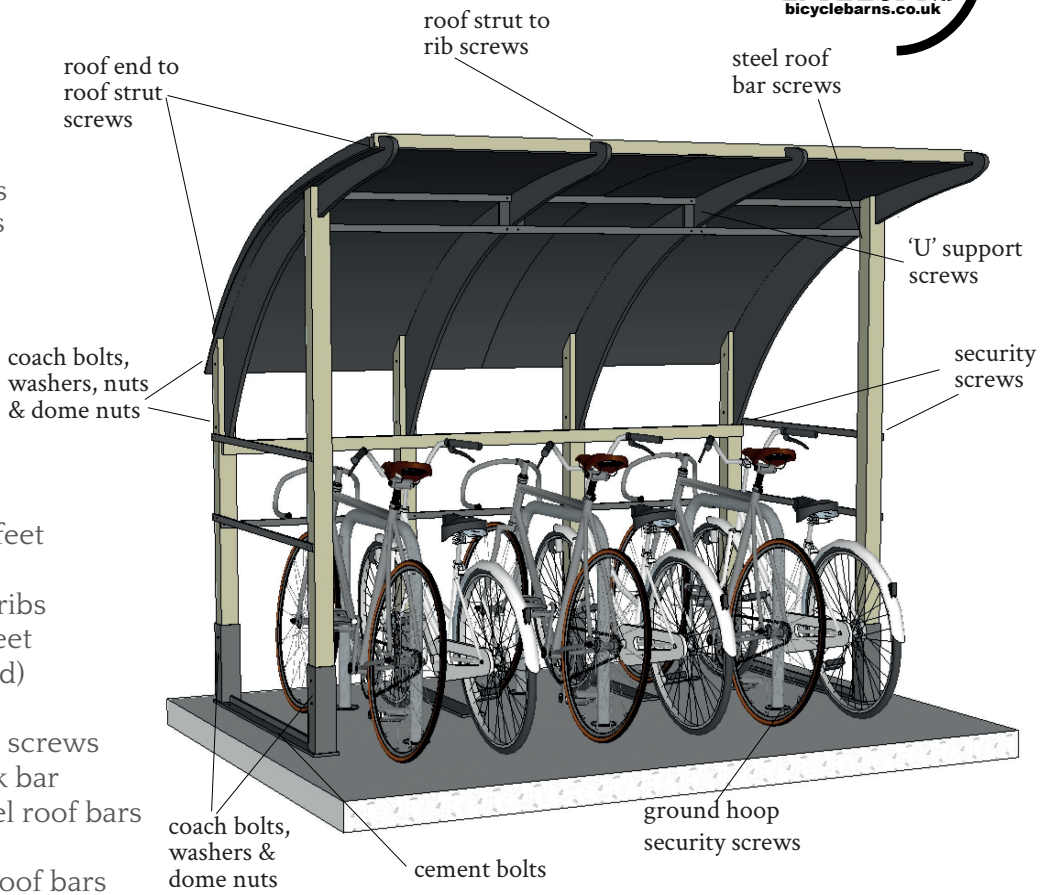

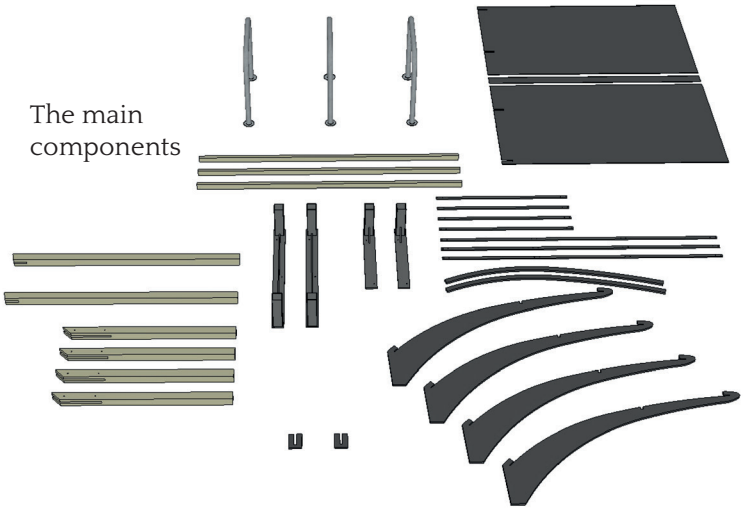

Basic Installation Instructions

Make sure the ground is prepared, even and levelled. You'll need enough room to work and lay out the components. You'll need a drill, drill bits, spanners / wrench, screwdrivers and ideally a spirit level.

1. Slot the oak legs into the steel feet and attach using 2 coach bolts, 4 washers and 2 dome nuts per leg. Finger tighten.
2. Slot the curved recycled ribs into the oak legs, so they are flush at the back and sit in the slots of the two outer front legs. Attach using 2 coach bolts, 4 washers (either side against the wood), 2 nuts and 2 dome nuts per leg. Finger tighten.
3. Attach the oak back strut, the lower metal security bar and the 4 short steel scurity bars to the oak legs using the steel security screws & a spirit level (or by eye if you don't have one). Use the pre drilled pilot holes to loosely attach at this stage, so you can remove the security screws by hand if necessary (once they are in, it will be impossible to unscrew them).
4. Attach the 2 long steel roof bars using small steel screws.. The top bar will sit in the slot in the rib and the lower one will support the ribs.
5. Attach the 2 'U' supports by sliding them into the ribs behind the long steel roof bars & pull tight before screwing.
6. Slide the large roofing sheets into the back slots of the curved rib, then clip the roof into the front rib slots, you can slightly bend the end ribs to get the roof into position. Once the two roof sheets meet perfectly down the middle, then use to roll of roofing tape to seal the joint. At this stage you'll have the basic structure. Please note there needs to be

a 10mm gap between the front edge of the roof and the front curved rib slots to allow for expansion in very hot weather. The unique floating roof design allows for the recycled plastic to expand and contract with the seasons.
7. Attach the front and back oak roof struts to the curved ribs using small steel screws. Leave a 1mm gap between the roof and the oak for drainage.
8. If screwing to a concrete, brick, stone or wooden floor, then using a drill, drill through the holes in the black metal feet and use 10 self tapping floor screws to loosly secure.
9. Attach the top end ribs to the oak roof struts using the small steel screws.

As soon as you are confident that everything is level and good (using a spirit level for each leg, the oak struts and the security bars) then tighten all the fittings, leaving the security screw tightening until last. Please remember that the security screws that attach the steel bars and the oak back strut to the oak legs are designed so that no-one can unscrew them, so you must be confident that the Bicycle Barn is constructed correctly before you finally tighten these.

10. Position the ground hoops equally between the steel feet, drill holes and bolt the ground hoops in place. Cap these with the amour rings by hammering.

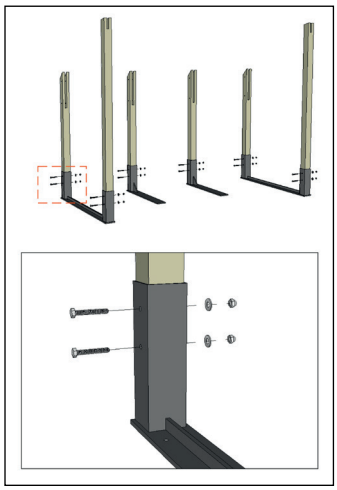

1. Slot the oak legs into the steel feet and attach using 2 coach bolts, 4 washers and 2 dome nuts per leg. Finger tighten.

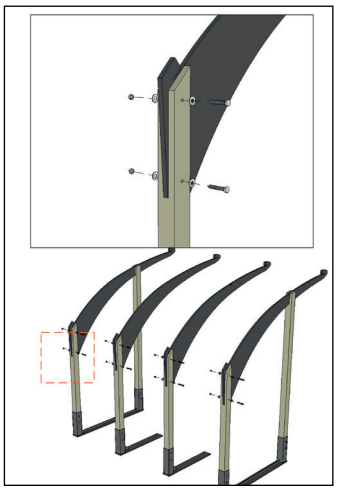

2. Slot the curved recycled ribs into the oak legs, so they are flush at the back and attach using 2 coach bolts, 4 washers (either side against the wood), 2 nuts and 2 dome nuts per leg. Again, finger tighten.

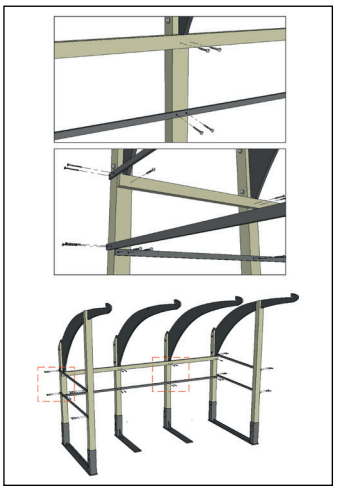

3. Attach the oak back strut, lower metal security bar and the 4 short steel security bars to the oak legs using the steel security screws. Use pre drilled holes and loosely attach, so you can remove the security screws by hand if necessary (once they are in tightly it will be impossible to unscrew them).

4. Now attach the two long steel roof bars at the back of the front oak legs using small steel screws. Fit the top bar into the slots in the ribs and the lower bar tightly under the ribs.

5. Attach the 2 'U' supports to by sliding them onto the middle ribs behind the 2 long steel roof bars. Pull bars together and attach using small steel screws.

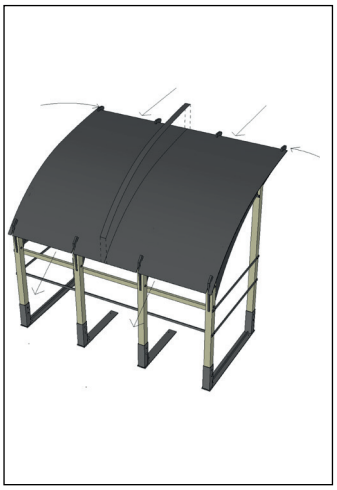

6. Slot the 2 roof sheets into place by clipping and sliding them into the ribs, so they meet exactly in the middle. Now carefully use the roofing tape to seal the middle joint.

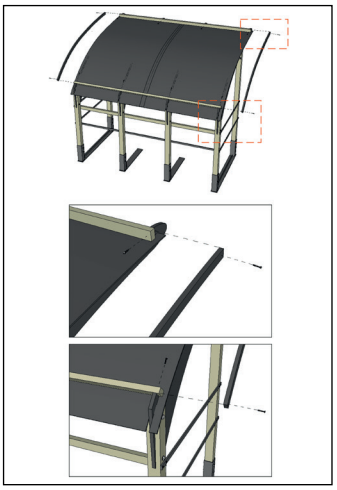

7. Screw the recycled plastic ends in place, making sure they are the correct way round, using small steel screws.

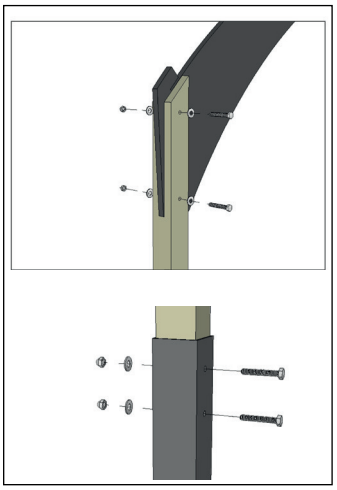

8. When you are confident that everything is fitted properly, then start to tighten all the fixings, leaving the security screws until last.

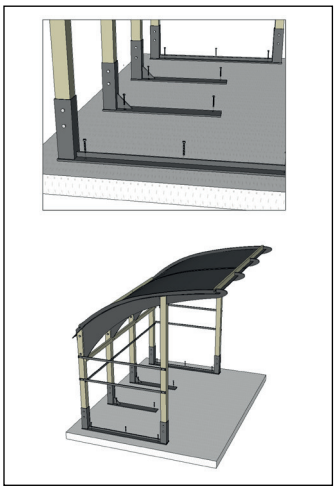

9. Bolt the steel feet to the ground using the self tapping cement bolts.

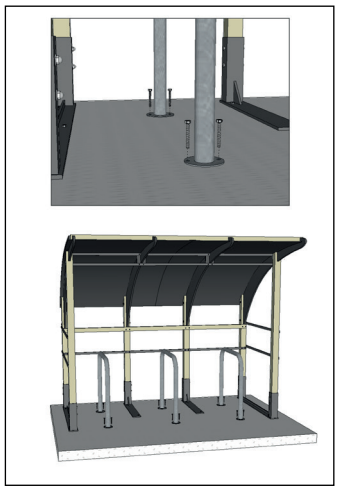

10. Position the ground hoops evenly spaced between each of the steel feet and bolt to the ground. If necessary, fit the amour collars on top of the bolts and tap into place with a hammer.

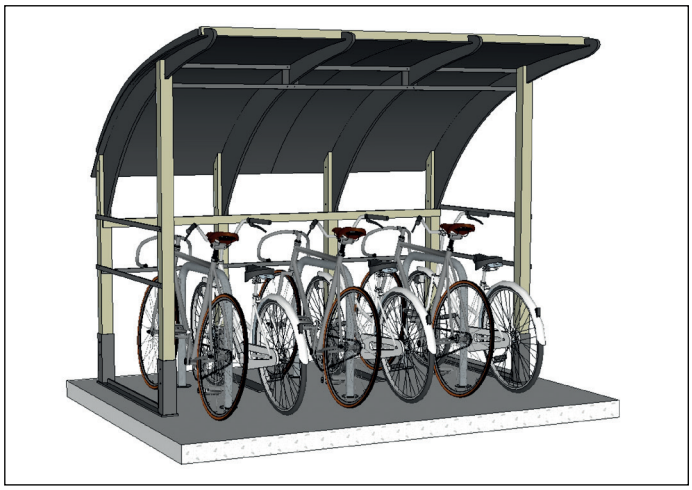

The finished Bicycle Barn